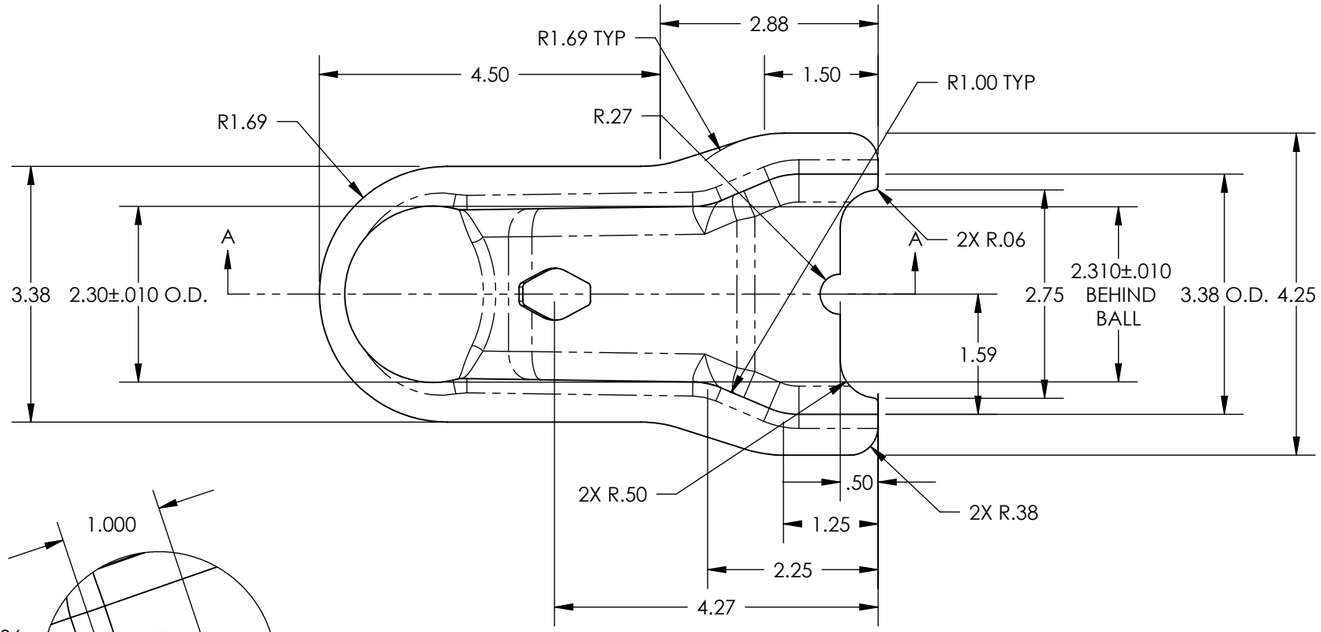

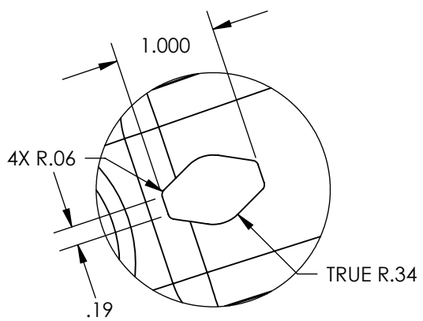

VIEW C-C
SCALE 1 : 1.5

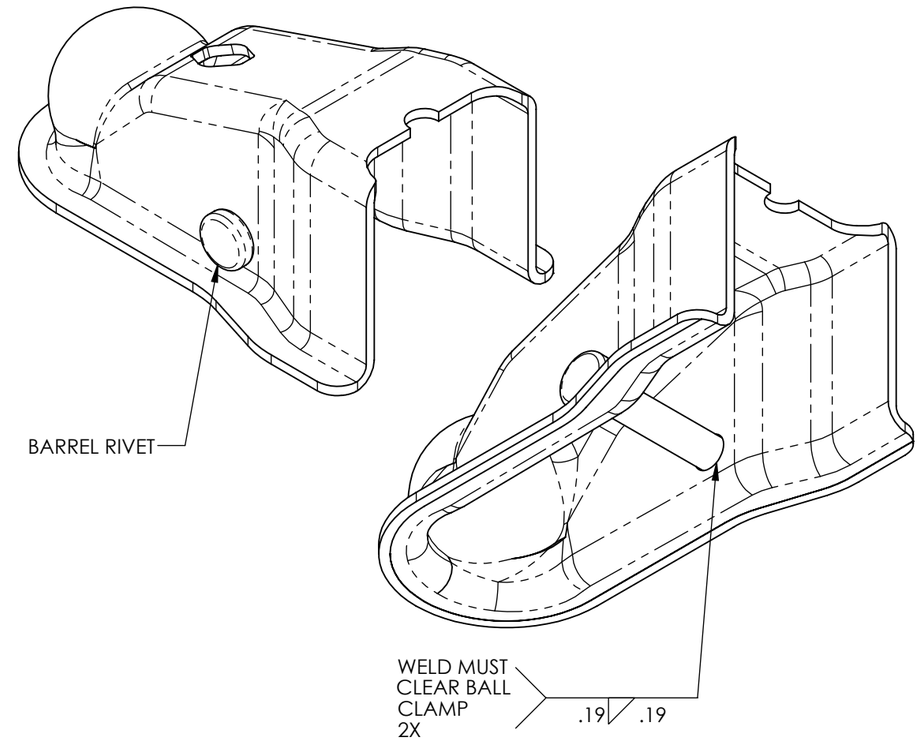

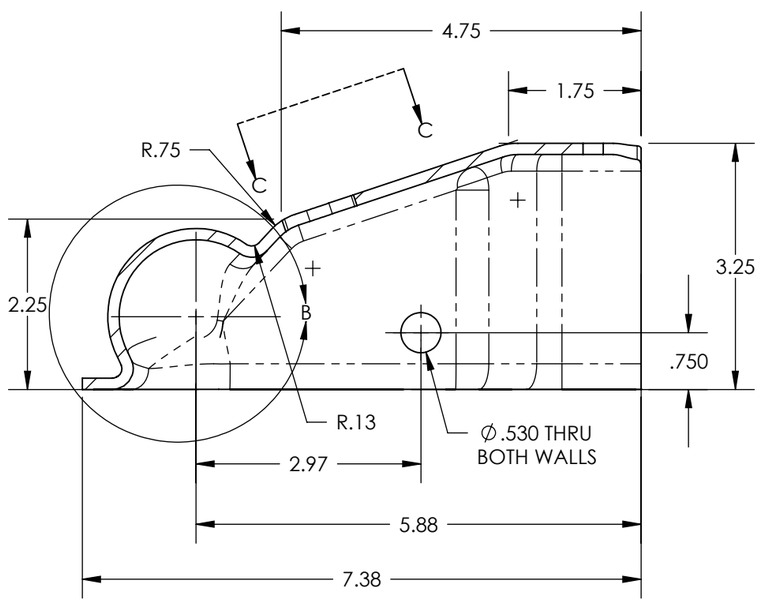

SECTION A-A

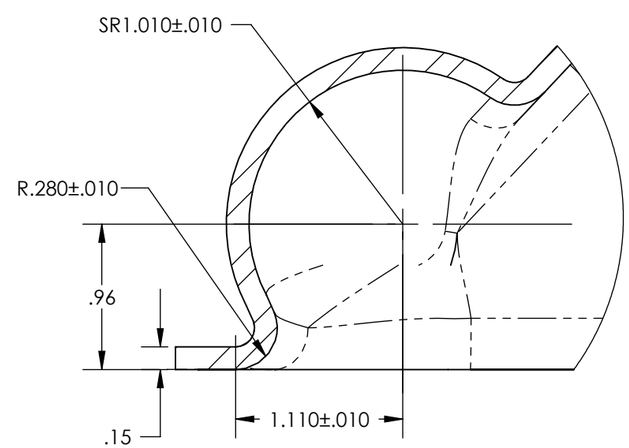

DETAIL B
SCALE 1 : 1

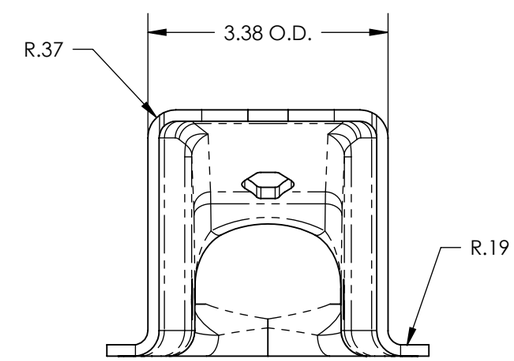

NOTE: APPLY WATER SOLUBLE OIL

MATERIAL: 9 GA STEEL			
THE DRAWING AND ALL INFORMATION THERE ON ARE THE PROPERTY OF DEMCO 4010 320TH STREET BOYDEN, IOWA 51234	UNLESS OTHERWISE SPECIFIEDALL DIMENSIONS ARE IN INCHES	DRAWN BY JK DATE 08/15/05	DESCRIPTION 2" COUPLER BODY F/CHANNEL
	THIRD ANGLE PROJECTION	APPOV. BY JCN DATE 06/30/20	DRAWING. NO. 64387 REV —
TOLERANCES .X = ±.060 .XXX = ±.010 NON-MACHINED .XX = ±.030 .XXX = ±.005 MACHINED MIN. MACHINE SURFACE 250 BREAK ALL SHARP EDGES BEND AND DRAFT ∠ ±1°		WEIGHT 2.38717133 VOLUME 8.47137097245 SCALE 1:2 SHEET 1 OF 1	