!! ATTENTION INSTALLER !! ATTENTION INSTALLER !! ATTENTION INSTALLER !! ATTENTION INSTALLER !!

DEMCO

LED LIGHT

All parts needed for this step are located in the "Coach Notification Bag"

1. Decide on a location for the LED Strip. The provided LED strip is extremely bright and can be placed in any location on the towed vehicle that is viewable in the rear camera of the coach. Many have found that the back side of the rear view mirror provides a good backdrop for the LED and is easily viewable in the coach's rear camera. The following steps are written with this in mind.
2. Using the provided double sided tape, attach the LED to the rear view mirror of the towed vehicle. *Note: During tow it may be helpful to angle the rear view mirror toward the rear camera of the coach.*
3. Conceal the wire by routing it along the top of the windshield and down the side of the A-pillar on the driver's side of the towed vehicle. The A-pillar can be removed if needed, but exercise caution as some models have side curtain air bags. Most A-pillar covers are secured with 1-2 screws (in the handle area) and hidden pop connectors. Remove the screws and gently pull the cover away from the pillar. *Note: It may be necessary to extend the wires of the LED.*
4. Route the red wire of the LED light through the firewall and connect to the 3-way crimp connector as stated in Step 3. *NOTE: You can use the supplied length of red wire to pass through the firewall to make this connection.*
5. Attach the black wire of the LED indicator light to the violet wire of the reed switch.
6. Attach the blue wire of the reed switch to a suitable frame ground. *Note: If there is not a suitable ground easily accessible under the dash, the ground wires can be routed through the fire wall with the airline and the LED red wire in Step 4 of this Installation Manual*
7. Insert the 10 amp fuse into the fuse holder.

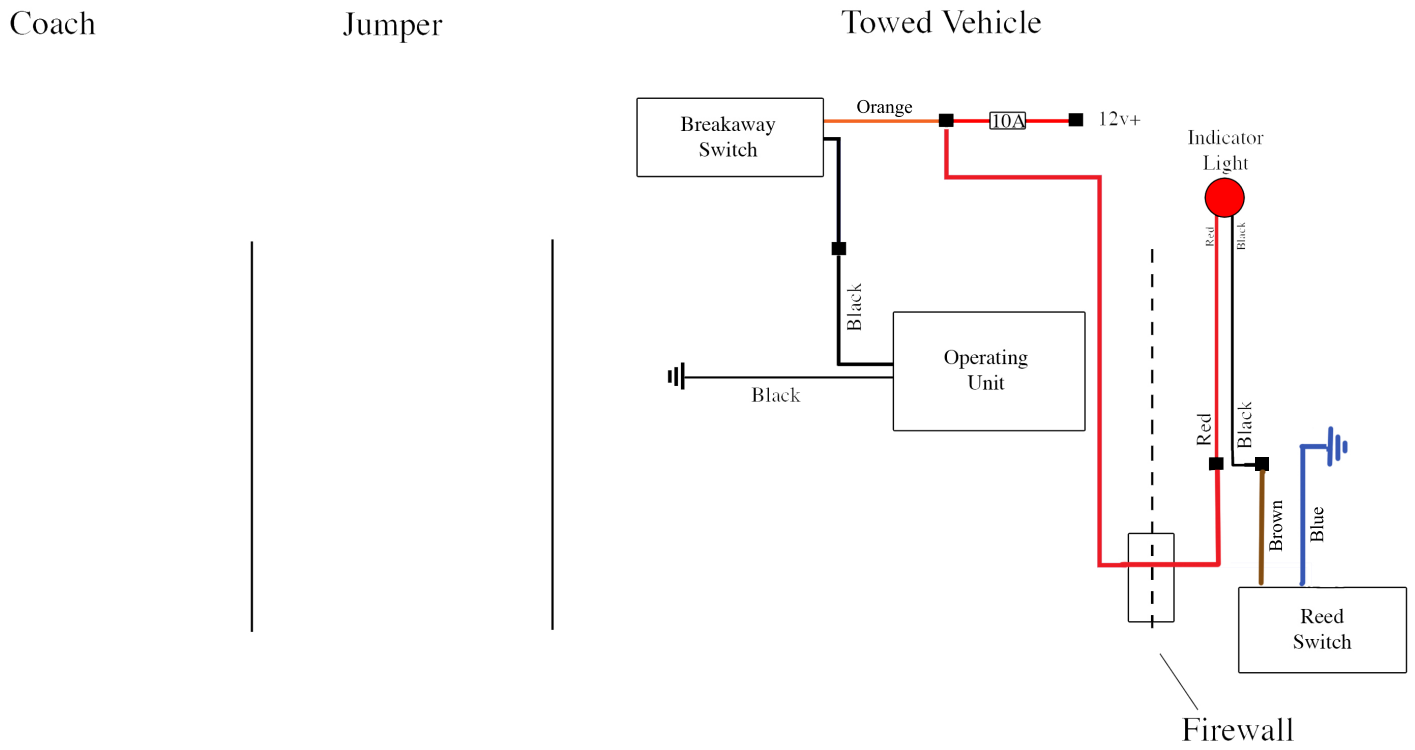

ATTENTION INSTALLER !! ATTENTION INSTALLER !! ATTENTION INSTALLER !!

!! ATTENTION INSTALLER !! ATTENTION INSTALLER !! ATTENTION INSTALLER !! ATTENTION INSTALLER !!

DEMCO

2 WIRE REED SWITCH

Connect the red wire on the Wireless CoachLink Transmitter to the breakaway fuse in the engine compartment of the towed vehicle.

Connect the white wire on the Wireless CoachLink Transmitter to the violet wire of the reed switch.

Connect the blue wire of the reed switch to a suitable ground. *Note: If the battery is disconnected on the towed be sure to run the ground directly to the negative battery terminal.*

Insert the 10 amp fuse into the fuse holder.

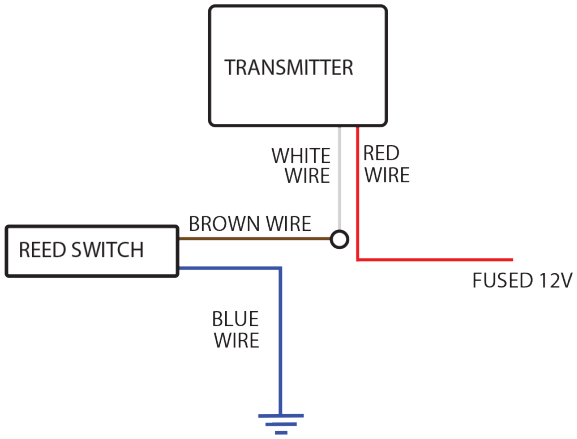

2 WIRE REED SWITCH

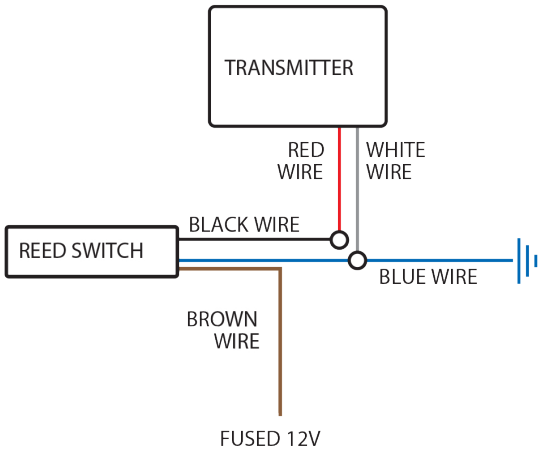

3 WIRE REED SWITCH

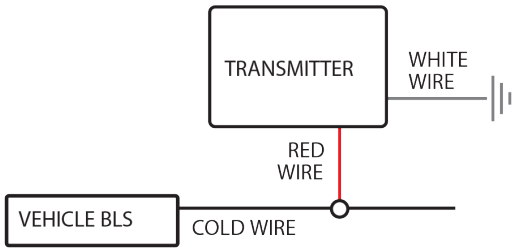

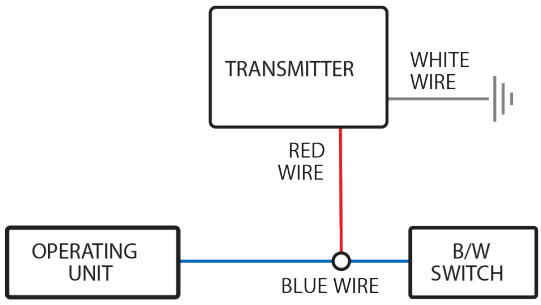

ATTENTION INSTALLER !! ATTENTION INSTALLER !! ATTENTION INSTALLER !!